SUBMITTAL DATA

MODEL EL-4-EVS — FIXED 4" ELEVATOR SHAFT LOUVER

STANDARD CONSTRUCTION:

Frame: 0.081 Extruded Aluminum, 4.16" Deep

Blade: 0.081 Extruded Aluminum positioned on a 40° angle on approximately 4.625" centers

Birdscreen: 0.75" x .051" Flattened Aluminum in removable frame. Screen is mounted as standard on inside (rear) as looking from exterior of building.

Glass: 0.125" [3.18] annealed (clear)

Finish: Mill Aluminum (Std.)

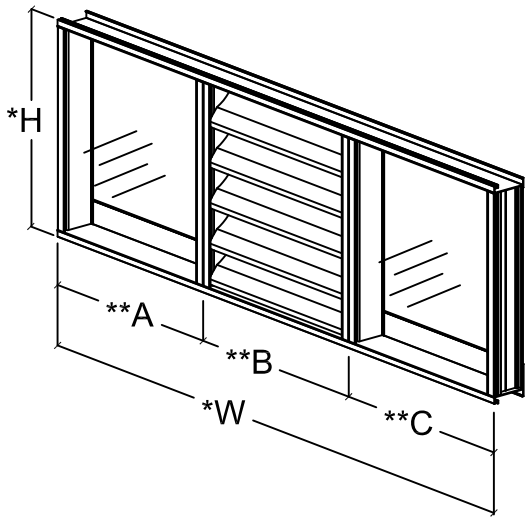

OPTIONS:

- ☐ Custom A,B or C Dimensions
- ☐ EL-2 Louver (2" Deep)
- ☐ Flanged Frame (1.50" std.)
- ☐ Custom Flange (1", 2" , or 3")
- ☐ Glazing Adapter (0.50" or 0.75")
- ☐ Extended Sill
- ☐ Insect Screen (Other Screens Available, See Screen Page)

Available Finishes:

- ☐ Durable Polyester (AAMA 2604)
- ☐ 70% PVDF Fluoropolymer (AAMA 2605)
- ☐ Yellow Primer
- ☐ Clear Anodize
- ☐ Dark Bronze Anodize

*Width and Height dimensions are approximately 1/4" under listed size.

**Standard Orientation is Louver Blades to make up $\frac{1}{3}$ of width, centered in assembly

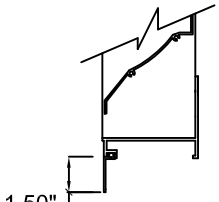

OPTIONAL FLANGE

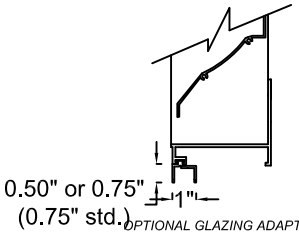

OPTIONAL GLAZING ADAPTER

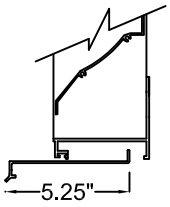

OPTIONAL EXTENDED SILL

Due to continuing research, United Enertech reserves the right to change specifications without notice.

United Enertech

3005 South Hickory Street
Chattanooga, Tennessee 37407
Tel: (423) 698-7715
Fax: (423) 698-6629
www.unitedenertech.com

MODEL EL-4-EVS (Elevator Shaft Louver)

DRAWN BY:	DATE:	REV. DATE:	REV. NO.	APPROVED BY:	DWG. NO.:
MHM	APRIL 2015			CLJ	A-8a

SUGGESTED SPECIFICATION

Funish and install louvers as hereinafter specified where shown on plans or as described in schedules. Louvers shall be "J" blade style with 40° stationary blades. Stationary blades shall be contained within a 4.16" frame. Louver components (heads, jambs, sills, blades, and mullions) shall be factory assembled by the louver manufacturer. Louver sizes too large for shipping shall be built up by the contractor from factory assembled louver sections to provied overall sizes required.

Louvers shall be United Enertech EL-4-EVS 6063T5 aluminum construction as follows:

FRAME: 4.16" deep, .081" nominal wall thickness

BLADES: .081" nominal wall thickness. Blades are positioned at 39° angle and spaced approximately 4.625" center to center.

SCREEN: .75" x .051" (19 x 1.3) expanded, flattened aluminum in removable frame.

FINISH: Select finish specification from United Enertech Finishes brochure.

PERFORMANCE DATA

EL-4-EVS **FREE AREA IN SQ. FT.**

Louver Height Inches	Width - Inches																			Louver Height Inches
	12	**18**	**24**	**30**	**36**	**42**	**48**	**54**	**60**	**66**	**72**	**78**	**84**	**90**	**96**	**102**	**108**	**114**	**120**	
12	0.35	0.57	0.78	1.00	1.21	1.43	1.65	1.86	2.08	2.29	2.51	2.72	2.94	3.16	3.37	3.59	3.80	4.02	4.24	**12**
18	0.53	0.86	1.18	1.51	1.84	2.16	2.49	2.82	3.14	3.47	3.80	4.12	4.45	4.78	5.10	5.43	5.76	6.08	6.41	**18**
24	0.81	1.30	1.80	2.30	2.80	3.29	3.79	4.29	4.78	5.28	5.78	6.28	6.77	7.27	7.77	8.26	8.76	9.26	9.76	**24**
30	1.10	1.77	2.44	3.12	3.79	4.47	5.14	5.81	6.49	7.16	7.84	8.51	9.19	9.86	10.53	11.21	11.88	12.56	13.23	**30**
36	1.29	2.08	2.87	3.66	4.46	5.25	6.04	6.83	7.62	8.42	9.21	10.00	10.79	11.58	12.38	13.17	13.96	14.75	15.54	**36**
42	1.56	2.51	3.47	4.43	5.39	6.34	7.30	8.26	9.22	10.17	11.13	12.09	13.05	14.00	14.96	15.92	16.88	17.83	18.79	**42**
48	1.79	2.90	4.00	5.11	6.21	7.32	8.42	9.52	10.63	11.73	12.84	13.94	15.04	16.15	17.25	18.36	19.46	20.57	21.67	**48**
54	2.04	3.30	4.55	5.81	7.06	8.32	9.58	10.83	12.09	13.34	14.60	15.85	17.11	18.37	19.62	20.88	22.13	23.39	24.65	**54**
60	2.31	3.73	5.15	6.57	7.99	9.40	10.82	12.24	13.66	15.08	16.50	17.92	19.34	20.76	22.18	23.60	25.02	26.44	27.86	**60**
66	2.59	4.18	5.77	7.37	8.96	10.55	12.14	13.74	15.33	16.92	18.51	20.11	21.70	23.29	24.88	26.48	28.07	29.66	31.25	**66**
72	2.88	4.65	6.42	8.19	9.96	11.73	13.50	15.27	17.04	18.81	20.58	22.35	24.12	25.89	27.66	29.43	31.20	32.97	34.74	**72**
78	3.06	4.94	6.83	8.71	10.59	12.47	14.36	16.24	18.12	20.01	21.89	23.77	25.65	27.54	29.42	31.30	33.19	35.07	36.95	**78**
84	3.33	5.39	7.44	9.49	11.54	13.59	15.64	17.70	19.75	21.80	23.85	25.90	27.95	30.01	32.06	34.11	36.16	38.21	40.26	**84**
90	3.62	5.85	8.08	10.31	12.54	14.77	17.00	19.23	21.46	23.68	25.91	28.14	30.37							**90**
96	3.82	6.17	8.52	10.86	13.21	15.56	17.91	20.26	22.61	24.96	27.31	29.66	32.01							**96**
102	4.08	6.60	9.11	11.62	14.14	16.65	19.16	21.67	24.19	26.70	29.21	31.73	34.24							**102**
108	4.37	7.06	9.75	12.43	15.12	17.81	20.50	23.19	25.88	28.56	31.25	33.94	36.63							**108**
114	4.66	7.52	10.39	13.25	16.12	18.98	21.85	24.71	27.58	30.45	33.31	36.18	39.04							**114**
120	4.83	7.81	10.78	13.76	16.73	19.71	22.68	25.66	28.63	31.61	34.58	37.56	40.53							**120**

Height - Inches

Water Penetration

Standard Air-.075 lb/ft^3

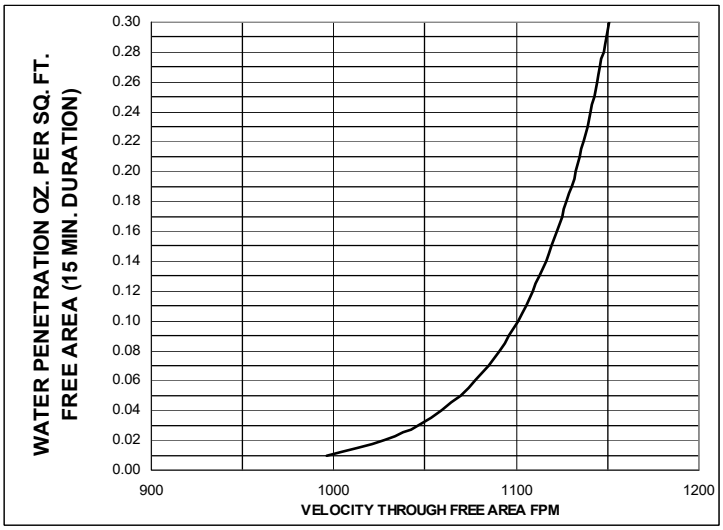

Beginning point of **WATER PENETRATION** for **MODEL EL-4-EVS** is **995 fpm**
free area velocity at .01 oz. of water

AIR FLOW RESISTANCE

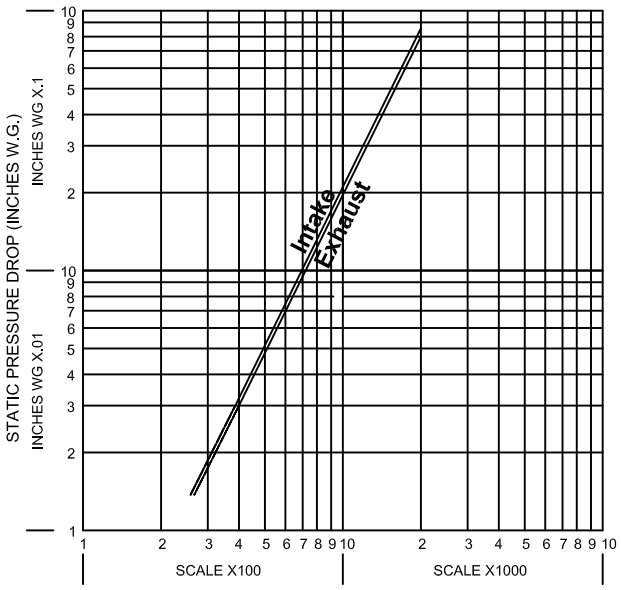

FREE AREA VELOCITY (FT/MIN)

Based on STANDARD AIR- .075 lb. per cubic foot.
Ratings do not include the effects of screen.
Test size 48" x 48"
Test Figure 5.5