MODEL XAC-4 — 8" Deep Acoustical Louver

Louver must carry the AMCA Seal for Water Penetration and Air Performance. Sound ratings shall comply with the following standards: "Recommended Practice for Laboratory measurements for airborne sound transmission loss of building partitions." ASTM designation E90-99 and "standard classification for dertermination of sound transmission class", ASTM designation E413-73. Louver shall be United Enertech **Model XAC-4**

STANDARD CONSTRUCTION:

Frame: 18 ga. galvanized

Blade (air side): 18 ga. galvanized

Blade (noise side): 20 ga. galvanized perforated

Absorbent fill: Advanced Microfibers composed of Polyester and Polyolefin

Screen: .50" x .050" flattened aluminum Screen mounted in a removable frame

Minimum Louver Size: 12"w x 12"h

Maximum Louver Size: 48"w x 120"h
Larger sizes are made in sections with vertical mullions

OPTIONS:

- ☐ Flanged Frame (1.50" std.)
- ☐ Custom Flange (1", 2" , or 3")
- ☐ Extended Sill
- ☐ Insect Screen (Other Screens Available, See Screen Page)
- ☐ Filter Racks (no screen)
- ☐ Security Bars
- ☐ Hinged Sub Frame
- ☐ Welded Construction
- ☐ Blank-off, Steel, non-insulated, no screen, non-removeable
- ☐ Blank-off, Steel, non-insulated, with bird screen or insect screen
- ☐ Blank-off, Steel, insulated double wall, with bird screen, removable
- ☐ Blank-off, Steel, insulated double wall, no screen, non-removable
- ☐ Aluminum Construction
- ☐ 304 Stainless Steel Const.
- ☐ 316 Stainless Steel Const.

Available Finishes:

- ☐ Durable Polyester Powder (AAMA 2604)
- ☐ Epoxy Powder
- ☐ Zinc Rich Gray Primer

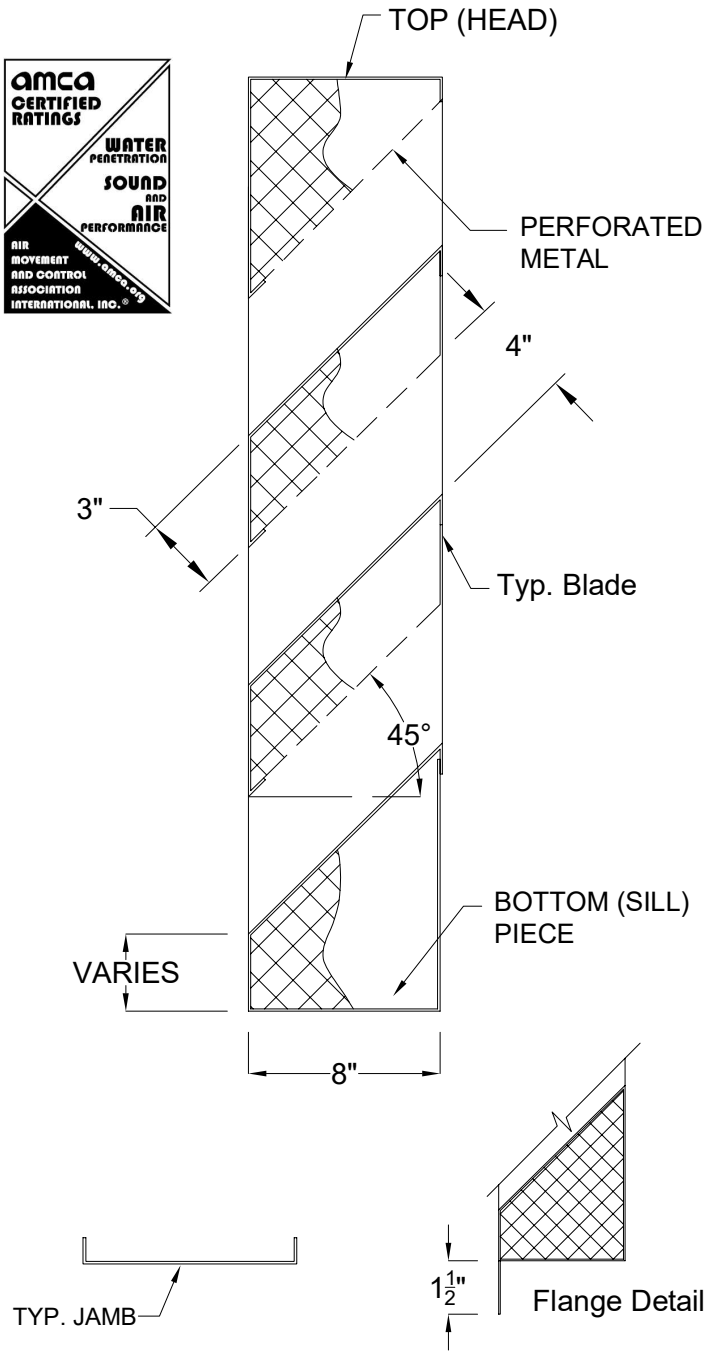

*Width and Height dimensions are approximately 1/4" under listed size.

Due to continuing research, United Enertech reserves the right to change specifications without notice.

United Enertech
3005 South Hickory Street
Chattanooga, Tennessee 37407
Tel: (423) 698-7715
Fax: (423) 698-6629
www.unitedenertech.com

MODEL XAC-4 (8" Deep Acoustical Louver)

DRAWN BY:	DATE:	REV. DATE:	REV. NO.	APPROVED BY:	DWG. NO.:
MHM	July 2006	June 2010	8	BGT	A-37

XAC-4

ACOUSTICAL DATA

Sound Transmission Class (STC)

This is a numerical two-digit figure rating derived from a standardized performance test made in accordance with ASTM E90-90 (Laboratory Measurement of Airborne Sound Transmission Loss of Building Partitions) and ASTM E413-87 (Standard Classification for Determination of Sound Transmission Class). The number is used in evaluating the effectiveness of an assembly in isolating or reducing airborne sound transmission. Acoustic performance ratings have been determined by an AMCA Laboratory.

Outdoor Indoor Transmission Class (OITC)

ASTM E1332 and ASTM E966 procedures are used to determine the OITC rating of building facades relative to ground or air transportation noise.

Full Octave Band Specimen Sound Transmission Loss

Hz	125	250	500	1000	2000	4000
TL	6	4	7	12	14	10
NR	12	10	13	18	20	16

TL = Transmission Loss NR = Free Field Noise Reduction NR = TL + 6 dB

PERFORMANCE DATA

AMCA Standard 500-L provides a reasonable basis for testing and rating louvers. Testing to AMCA Standard 500-L is performed under a certain set of laboratory conditions. This does not guarantee that other conditions will not occur in the actual environment where louvers must operate.

The louver system should be designed with a reasonable safety factor for louver performance. To ensure protection from water carryover, design with a performance level somewhat below maximum desired pressure drop and .01 oz./sq.ft. of water penetration.

Beginning point of WATER PENETRATION
is
868 fpm
free area velocity at .01 oz. of water penetration

United Enertech certifies that the XAC-4 shown herein is licensed to bear the AMCA Seal. The ratings shown are based on tests and procedures performed in accordance with AMCA Publication 511 and comply with the requirements of the AMCA Certified Ratings Program. The AMCA certified rating seal applies to air performance ratings and water penetration ratings.

WATER PENETRATION

Standard Air-.075 lb/ft³

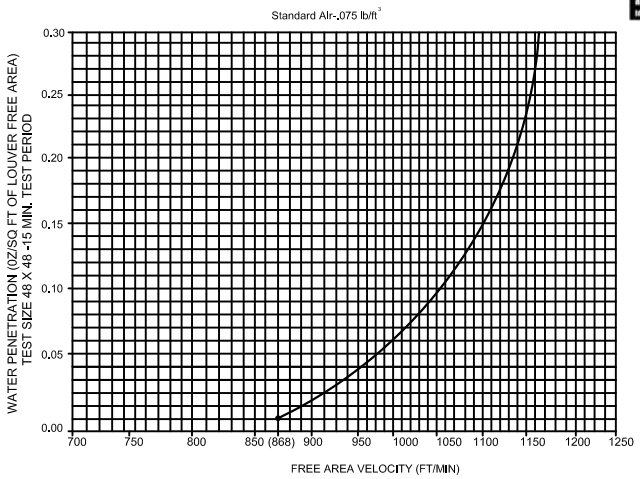

PRESSURE DROP

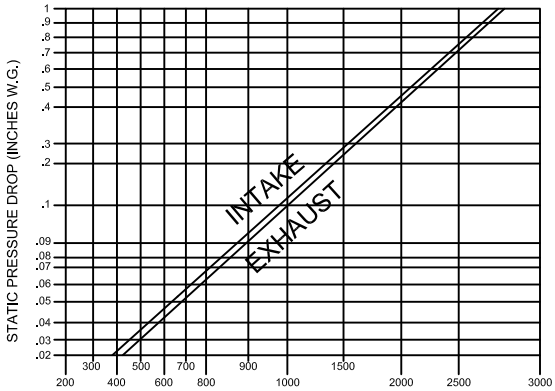

TEST SIZE: 48" X 48"

FREE AREA VELOCITY (FT/MIN)

Based on STANDARD AIR- .075 lb. per cubic foot.
Ratings do not include the effects of screen.

FREE AREA CHART (SQUARE FEET)

Louver Height Inches	Louver Width In Inches							Louver Height Inches
	12	**18**	**24**	**30**	**36**	**42**	**48**	
12	0.29	0.44	0.59	0.73	0.88	1.02	1.17	**12**
18	0.44	0.66	0.88	1.1	1.32	1.54	1.76	**18**
24	0.59	0.88	1.17	1.46	1.76	2.05	2.34	**24**
30	0.73	1.1	1.46	1.83	2.19	2.56	2.93	**30**
42	1.02	1.54	2.05	2.56	3.07	3.58	4.1	**42**
48	1.17	1.76	2.34	2.93	3.51	4.1	4.46	**48**
54	1.32	1.97	2.63	3.29	3.95	4.61	5.27	**54**
60	1.46	2.19	2.93	3.66	4.39	5.12	5.85	**60**
66	1.61	2.41	3.22	4.02	4.83	5.63	6.44	**66**
72	1.76	2.63	3.51	4.39	5.27	6.14	7.02	**72**
78	1.9	2.85	3.8	4.75	5.7	6.65	7.61	**78**
84	2.05	3.07	4.1	5.12	6.14	7.17	8.19	**84**
90	2.19	3.29	4.39	5.48	6.58	7.68	8.78	**90**
96	2.34	3.51	4.68	5.85	7.02	8.19	9.36	**96**
102	2.49	3.73	4.97	6.22	7.46	8.7	9.95	**102**
108	2.63	3.95	5.27	6.58	7.9	9.21	10.5	**108**
114	2.78	4.17	5.56	6.95	8.34	9.73	11.1	**114**
120	2.93	4.39	5.85	7.31	8.78	10.2	11.7	**120**